PMODE [2:0]			Description
2	1	0	
0	0	0	10BT Half-duplex, Auto-negotiation disabled
0	0	1	10BT Full-duplex, Auto-negotiation disabled
0	1	0	100BT Half-duplex, Auto-negotiation disabled
0	1	1	100BT Full-duplex, Auto-negotiation disabled
1	0	0	100BT Half-duplex, Auto-negotiation enabled
1	0	1	Not used
1	1	0	Not used
1	1	1	All capable, Auto-negotiation enabled

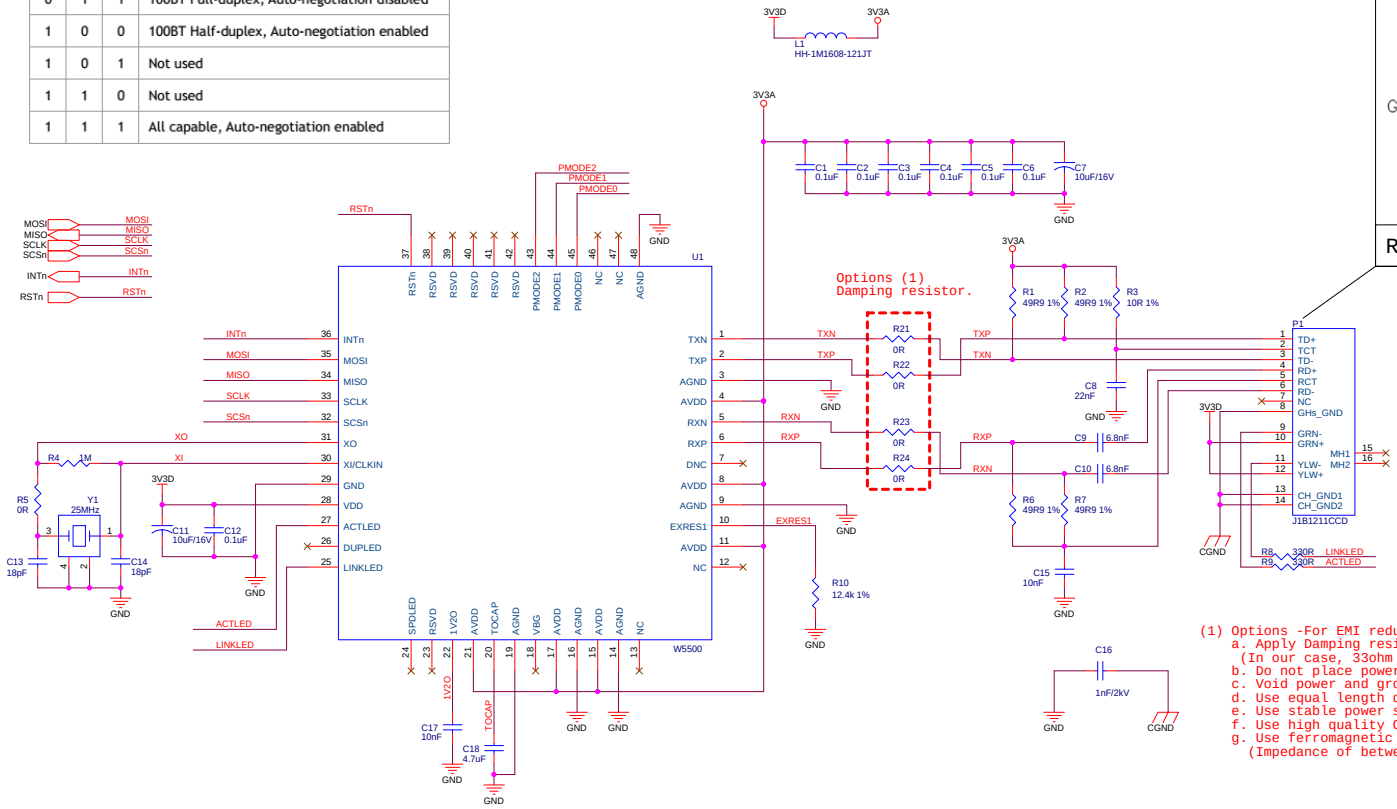

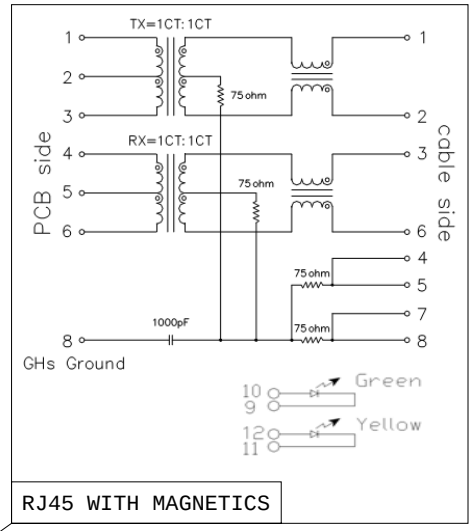

RJ45 WITH MAGNETICS

(1) Options -For EMI reduction.
a. Apply Damping resistors.
(In our case, 33ohm was best for EMI reduction.)
b. Do not place power jack nearby RJ-45 connector.
c. Void power and ground planes under discrete magnetic components.
d. Use equal length differential MDI (Medium Dependent Interface) signal traces.
e. Use stable power source.
f. Use high quality CAT5E.
g. Use ferromagnetic bead between digital vdd and analog vdd.
(Impedance of between 100 and 2000 ohms at 100MHz is adequate.)

WIZnet

Title	W5500-Ref-RJ45WithMag	
Size C	Document Number <Doc>	Rev
Date: Friday, September 25, 2015	Sheet 2 of 2	